MAGNITUDE COMPARATOR

LAB # 06

Fall 2023

CSE-202 Digital Logic Design

Submitted by: Maira Zafar , Syeda Afia Shah

Registration No. 2115,2106

Class Section: C

"On my honor, as student of University of Engineering and Technology, I have neither given nor received unauthorized assistance on this academic work."

Submitted to:

SIR REHMAT ULLAH KHATTAK

DATED: 28 –NOV- 2023

Department of Computer Systems Engineering

University of Engineering and Technology, Peshawar

MAGNITUDE COMPARATORS:

Magnitude comparators are circuits used to compare two binary numbers.
We can have three possible relationships between any two numbers; either they are equal, or one is greater than the other, or smaller.
We express these three relations through Boolean Expressions.
The implementation of the circuits is made following the Boolean expressions.

COMPONENTS:

- 8 1k ohm resistors
- 1 DIP switch
- Jumper wires
- IC's 7404, 7408, 7432, 7486, 7485
- 3 LED's

IMPLEMETATION OF 1-BIT COMPARATOR

A 1-bit comparator compares two 1-bit binary numbers.
Let's say the numbers are A0, B0
Then the expressions for a 1-bit comparator are;

Expressions:

- F1=(A>B) =AB'
- F2=(A<B)=A'B
- F3=(A=B) = $(A \oplus B)$

BlOCK AND LOGIC DIGRAM:

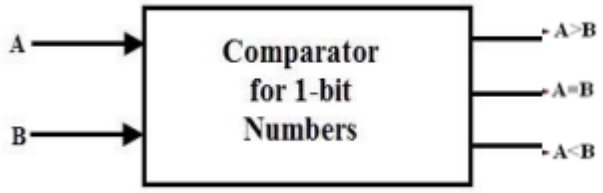

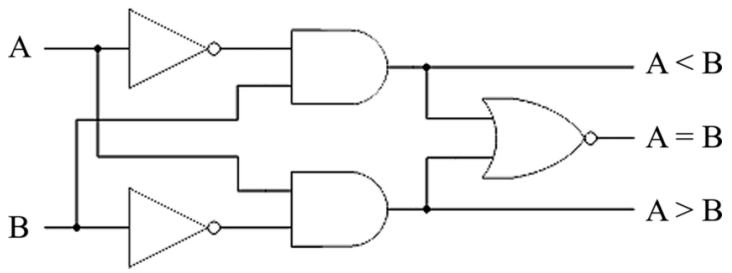

Truth Table

A	B	A=B	A<B	A>B
0	0	1	0	0
0	1	0	1	0
1	0	0	0	1
1	1	1	0	0

CONNECTIONS:

- Take input A0 from switch and pass to IC 7408.
- Take input B0 from switch and pass it to IC 7404. Pass this inverted input to IC 7408 to AND it with A0. Pass the output of this gate to 1st LED. This is our function F1.
- Again take A0 from switch and pass it to 7404. Pass this inverted A0 to 7408.
- Taking B0 from switch, AND it with the inverted A0. Pass their output to 2nd LED. This is our function F2.
- Take A0, and B0 from switch and pass to IC 7486.
- Invert the output of 7486 and pass this inverted output to 3rd LED. This is our function F3.
- TRUTH TABLE FOR A 1-BIT COMPARATOR

IMPLEMENTATION OF 2-BIT COMPARATOR:

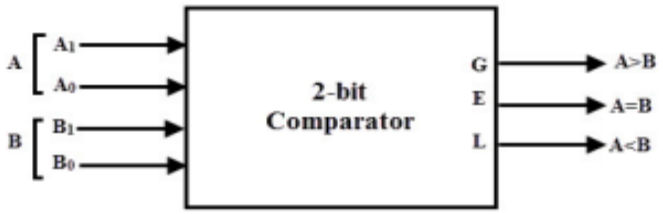

A 2-bit comparator compares two binary numbers.
Let's say the binary numbers are;
A1A0 and B1B0.
Then, the following functions describe any possible relation between them:

- F1=A1B1'+(A1 ⊙B1) A0B0'
- F2=A1'B1+(A1⊙B1) A0'B0
- F3=(A1⊙B1) (A0⊙B0)

CONNECTIONS:

For the implementation of F1, make connections following the output expression.
Similarly, for the implementation of F3, follow the expression.
Now F2 can be implemented by combining the outputs of F1, and F3.
The simplified output function for F2 can be derived using Truth Table.

TRUTH TABLE :

Inputs				Outputs		
A_1	A_0	B_1	B_0	A>B	A=B	A<B
0	0	0	0	0	1	0
0	0	0	1	0	0	1
0	0	1	0	0	0	1
0	0	1	1	0	0	1
0	1	0	0	1	0	0
0	1	0	1	0	1	0
0	1	1	0	0	0	1
0	1	1	1	0	0	1
1	0	0	0	1	0	0
1	0	0	1	1	0	0
1	0	1	0	0	1	0
1	0	1	1	0	0	1
1	1	0	0	1	0	0
1	1	0	1	1	0	0
1	1	1	0	1	0	0
1	1	1	1	0	1	0

SIMPLIFYING FUNCTION F2 USING K-MAPS:

OUTPUT FUNCTION:

F2=F1'F3', Derived from truth table.

F1	F2	F3
0	0	1
0	1	0
1	0	0

	F3'	F3
F1'	1	0
F1	0	X

Combining the minterms with output 0:

F2=F1+F3

F2'=(F1+F3)'

Where, F2' is the simplified function for the implementation of F2.

<u>LOGIC DIAGRAM:</u>

Based on the simplified Boolean functions for the three outputs A>B, A=B and A<B, the logic diagram of the 2-bit magnitude comparator is shown below:

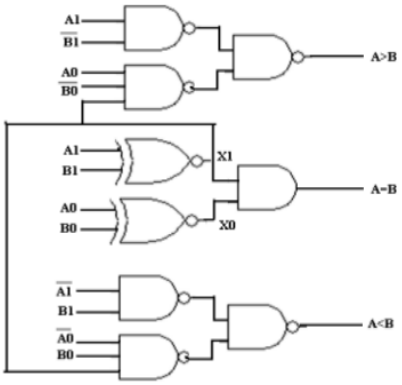

LAB PERFORMANCE:

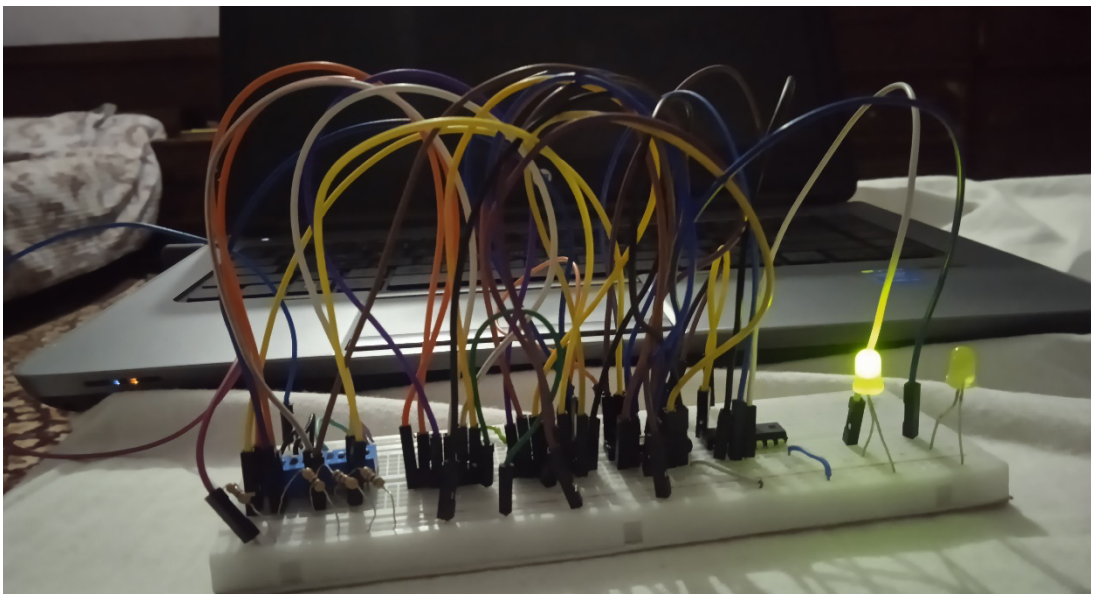

IMPLEMENTATION OF 8-BIT COMPARATOR:

An 8-bit comparator compares two binary numbers with 8-bits each.
For the implementation of an 8-bit comparator we need two 7485 comparator IC's.
An 8-bit comparator has,

- 16 inputs; A7A6A5A4A3A2A1A0, and B7B6B5B4B3B2B1B0
- 3 outputs from both comparator IC's.
- The 3 outputs from the 1st IC (comparing the bits, A7A6A5A4, and B7B6B5B4) is passed to the 2nd cascaded comparator IC as inputs to pin 2,3,4.
- We get three outputs from the 2nd IC (from pins 5,6,7) which are passed to three LED's.
- Connections are made following the pinout of IC 7485.

PINOUT OF IC7485:

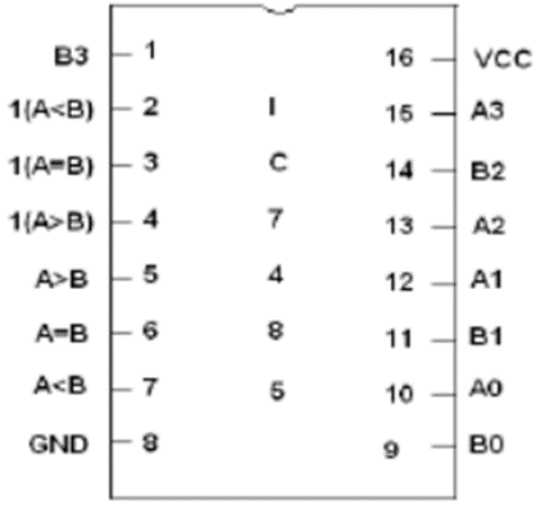

LOGIC DIAGRAM:

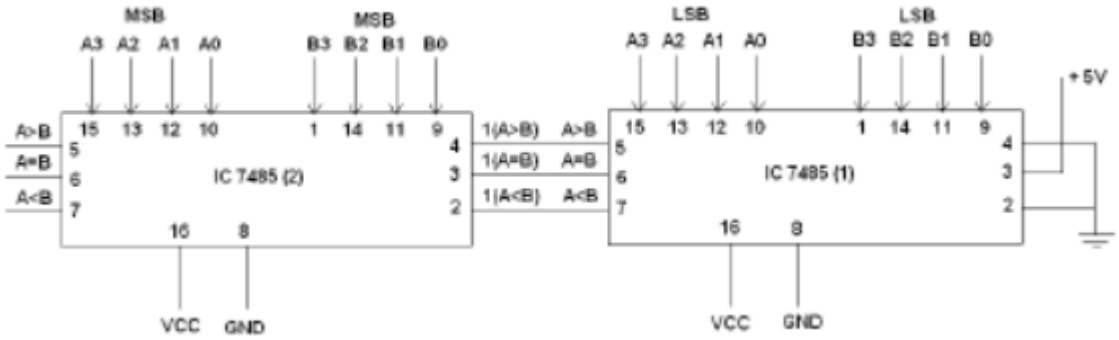

TRUTH TABLE:

A	B	A>B	A=B	A<B
0000 0000	0000 0000	0	1	0
0001 0001	0000 0000	1	0	0
0000 0000	0001 0001	0	0	1